ISL6236A DEMO BOARD

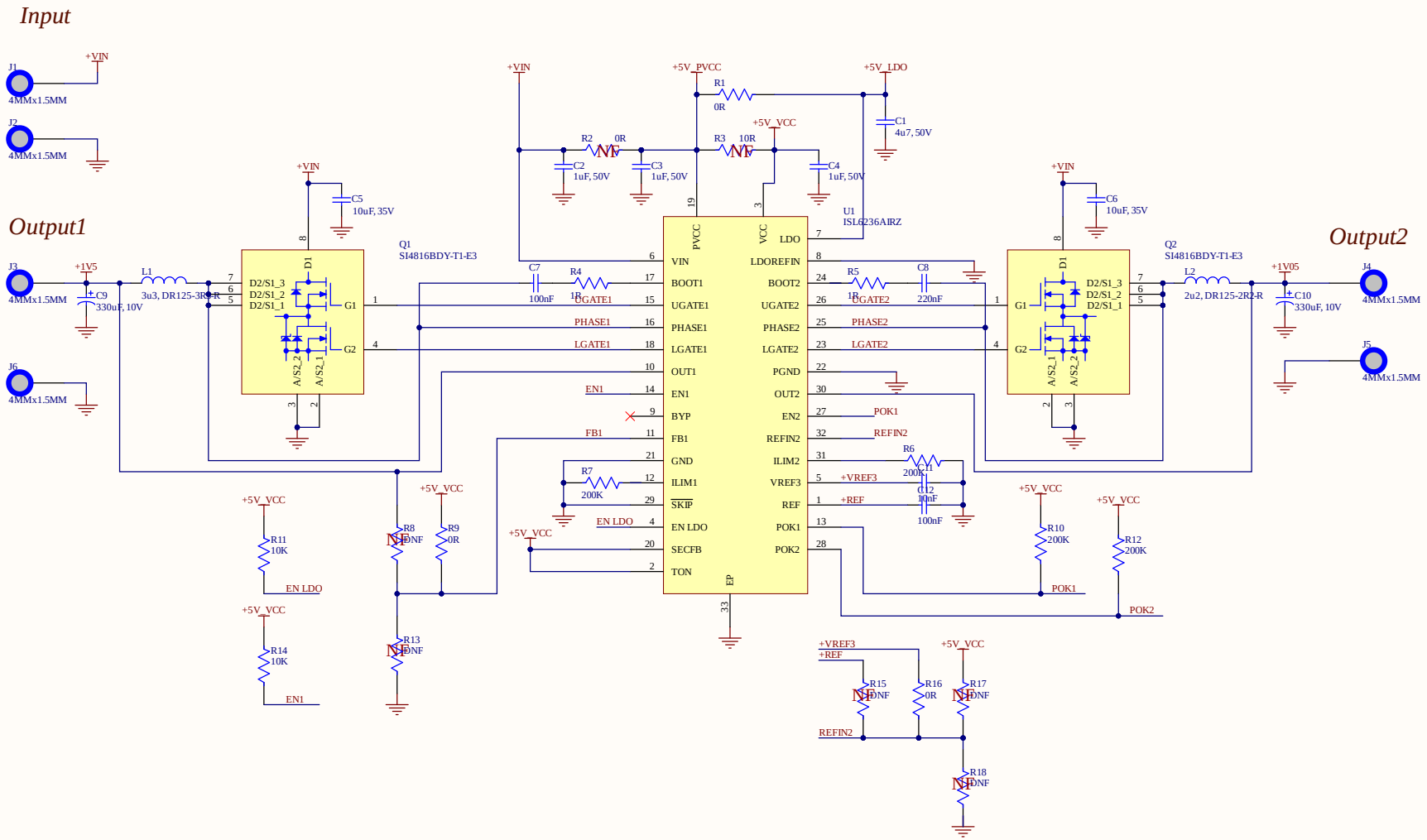

Title		
Size A3	Number	Revision
Date: 4/02/2023		Sheet of
File: C:\Users\..\ISL6236A.SchDoc		Drawn By: